Technical Drawing

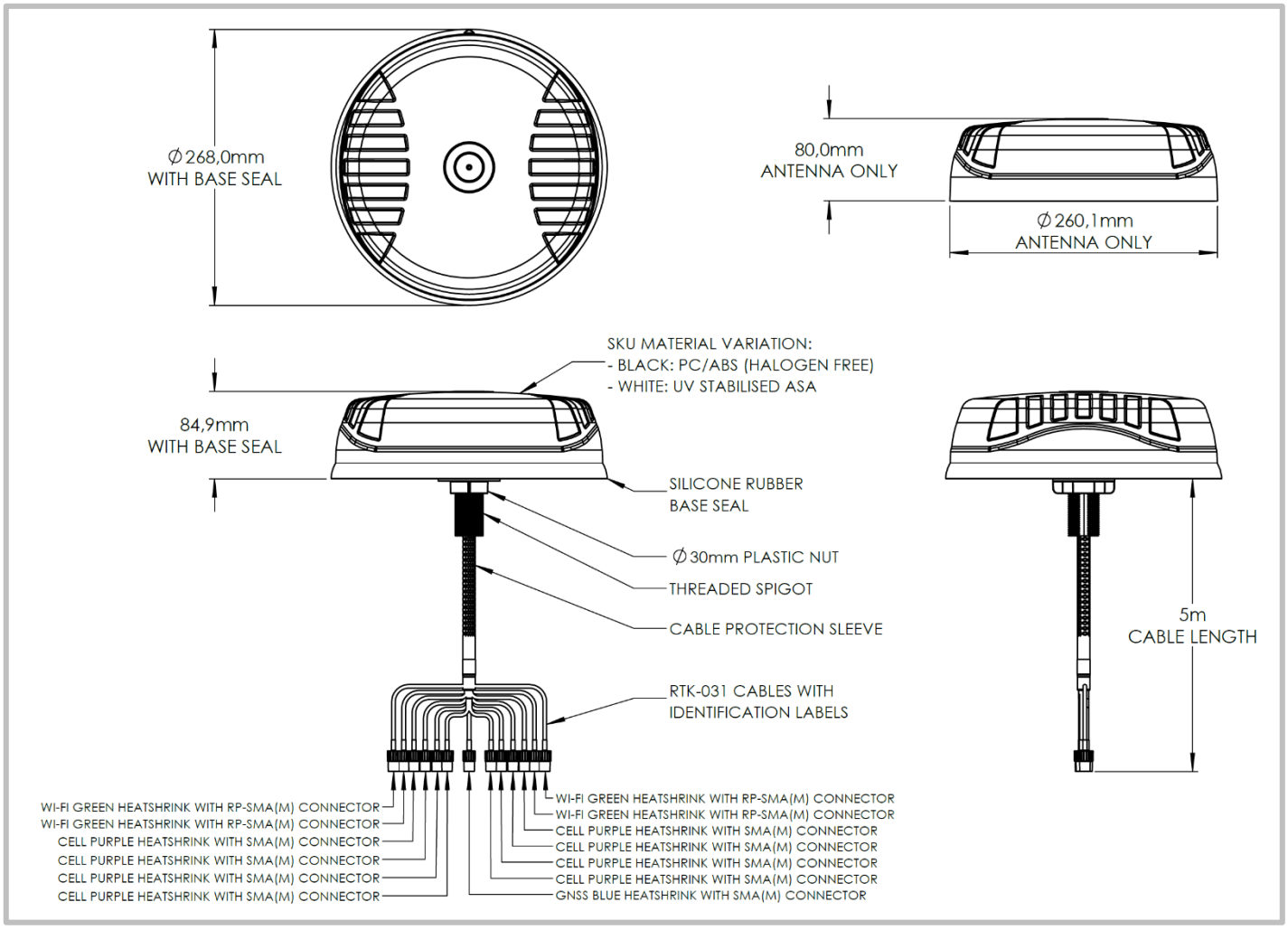

©2026 Poynting Antennas (Pty) Ltd. All rights reserved
Product Specifications may change without prior notice